Drying Tumblers

150 Pound Capacity

Refer to Page 3 for Model Numbers

Parts

Alliance Laundry Systems

www.comlaundry.com

Part No. M411449R5
October 2008

Table of Contents

Title	Page
Parts Ordering Information	2
Serial Plate Location	2
Model Identification	3
Single Timer Control	4
Dual Timer Controls	6
Temperature Controls	8
Access and Lint Panels	10
Front Panels	12
Loading Door	14
Lint Screen and Frame	16
Drive Guard Components	18
Drive Sheave, Step Pulley and Belts	20
Trunnion Bearings	22
Cylinder and Trunnion Assembly	24
Cylinder Drive Motor	26
Fan and Motor	28
Exhaust System Components	30
Control Thermostats	32
Gas Burner and Controls	34
Steam Heating Unit	36
Airflow Switch	38
Reversing Controls	40
Parts Index	43

© Copyright 2008, Alliance Laundry Systems LLC

All rights reserved. No part of the contents of this book may be reproduced or transmitted in any form or by any means without the expressed written consent of the publisher.

Parts Ordering Information

If literature or replacement parts are required, contact the source from whom the machine was purchased or contact Alliance Laundry Systems at (920) 748-3950 for the name and address of the nearest authorized parts distributor.

For technical assistance, call (920) 748-3121.

Serial Plate Location

When calling or writing about your product, be sure to mention model and serial numbers. Model and serial numbers are located on serial plate(s) as shown.

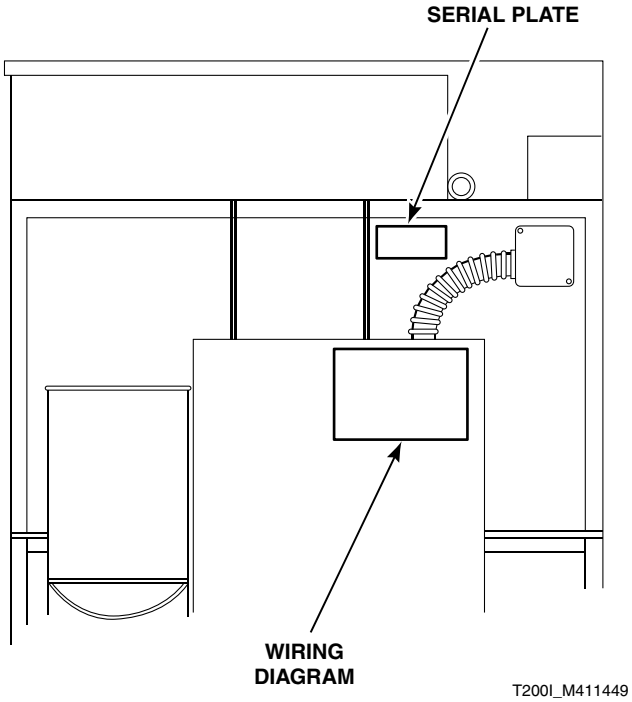

© Copyright, Alliance Laundry Systems LLC – DO NOT COPY or TRANSMIT

Model Identification

Information in this manual is applicable to these tumbler models:7

JT150CG	JTD150CG	ST150CG	STD150CG
JT150CSH	JTD150CSH	ST150CSH	STD150CSH

Control Suffixes:

MT – manual timer

© Copyright, Alliance Laundry Systems LLC – DO NOT COPY or TRANSMIT

Single Timer Control

Models JT150CG, JT150CSH, ST150CG and ST150CSH

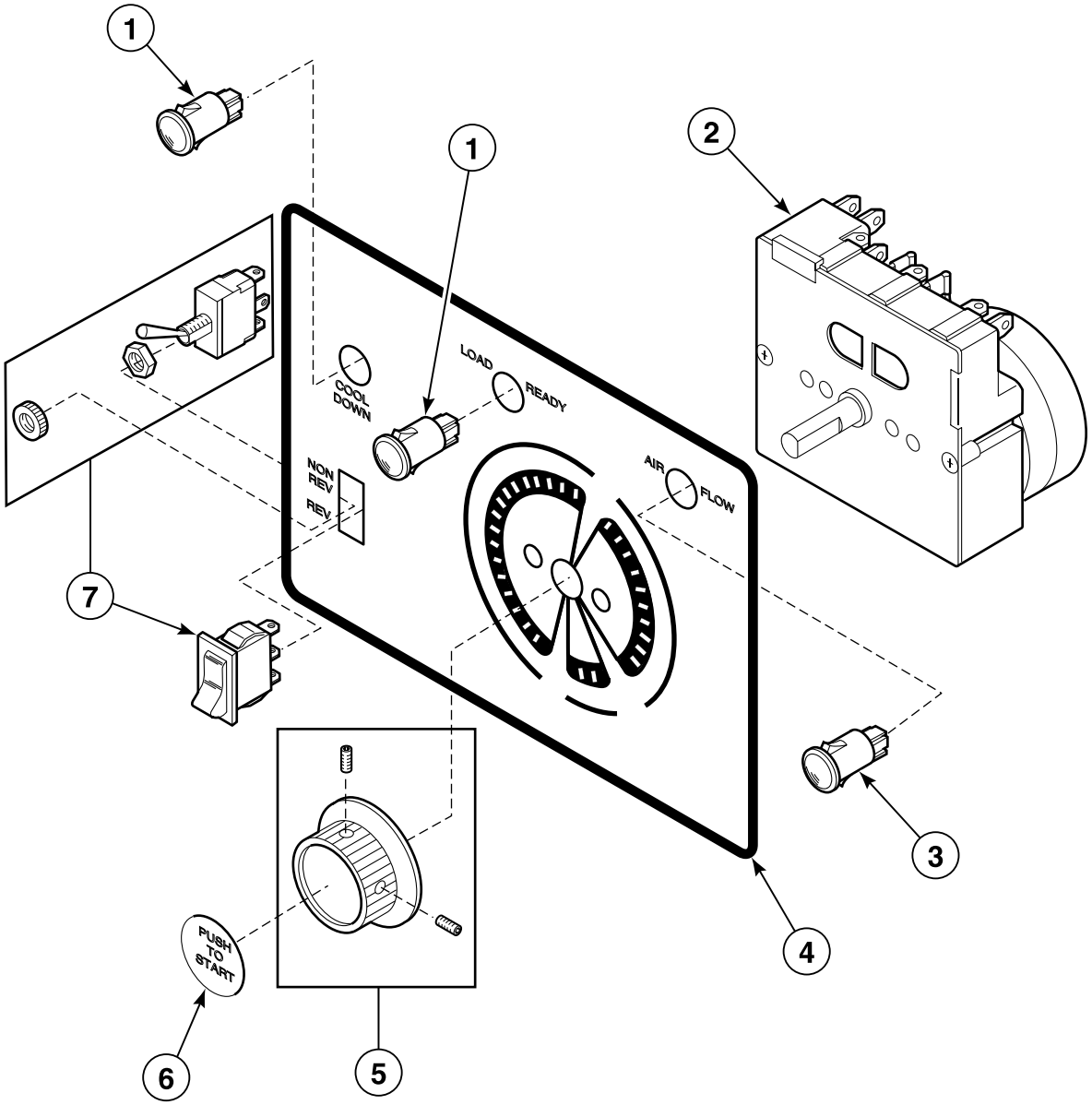

TMB2212P_M411449

© Copyright, Alliance Laundry Systems LLC – DO NOT COPY or TRANSMIT

Single Timer Control

REF	PART NO.	DESCRIPTION	COMMENTS
1	N/A	Light	Cool-down or ready
2	N/A	Timer	3 cycle; 50 Hertz
	N/A	Timer	3 cycle; 60 Hertz
3	N/A	Light	Airflow
4	N/A	Timer Label	Silver
	N/A	Timer Label	Black
5	H83901157	Control Knob	
6	N/A	Push-to-Start Label	
7	M400945	Toggle Switch	Reversing; Includes nut
	M413270	Rocker Switch	Reversing/nonreversing

N/A = Part no longer available

© Copyright, Alliance Laundry Systems LLC – DO NOT COPY or TRANSMIT

Dual Timer Controls

Models JTD150CG, JTD150CSH, STD150CG and STD150CSH

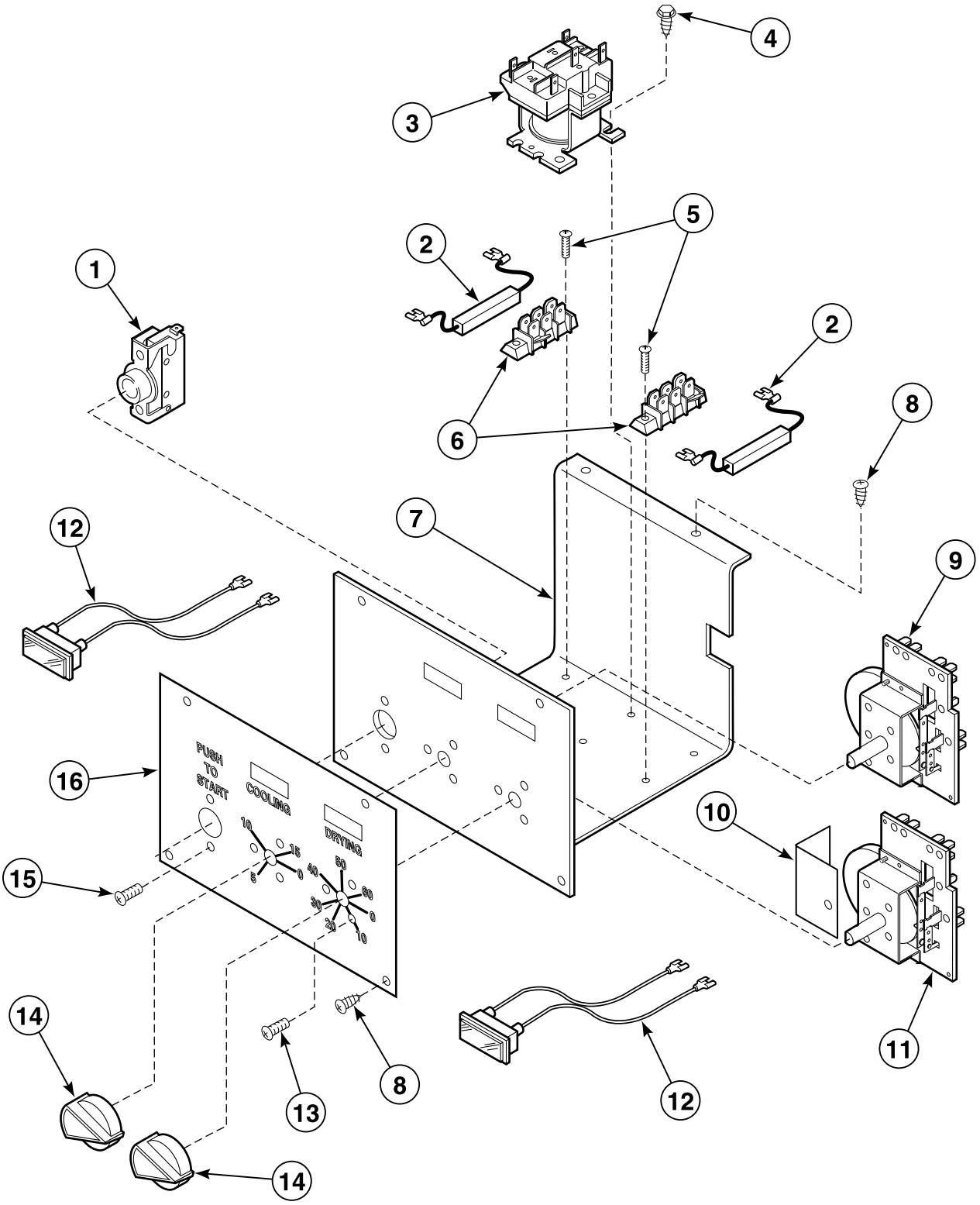

© Copyright, Alliance Laundry Systems LLC – DO NOT COPY or TRANSMIT

Dual Timer Controls

REF	PART NO.	DESCRIPTION	COMMENTS
1	44106901P	Push-to-Start Switch Kit	
2	M410992	Resistor Assembly	60 Hertz
3	M400911P	Relay	
4	51780	Screw	
5	M400071	Screw	
6	N/A	Terminal Bracket	
7	N/A	Timer and Panel Box	
8	M400664	Screw	
9	M410902P	Timer Kit	Cooling; Mallory; 50 Hertz
	M410900P	Timer Kit	Cooling; Mallory; 60 Hertz
10	N/A	Fishpaper	
11	M410903P	Timer Kit	Drying; Mallory; 50 Hertz
	M410901P	Timer Kit	Drying; Mallory; 60 Hertz
12	M400704	Pilot Light	
13	M411052	Screw	Truss
14	M400773	Knob	Timer; Black with silver dot
	M410927	Knob	Timer; Black with white dot; Models JTD150CG and JTD150CSH
15	M400072	Screw	
16	N/A	Graphic Panel	Timer; Silver
	M410869	Graphic Panel	Timer; Black; Models JTD150CG and JTD150CSH
	N/A	Graphic Panel	Timer; Black; Models STD150CG and STD150CSH

N/A = Part no longer available

© Copyright, Alliance Laundry Systems LLC – DO NOT COPY or TRANSMIT

Temperature Controls

Models STD150CG, STD150CSH, JTD150CG and JTD150CSH

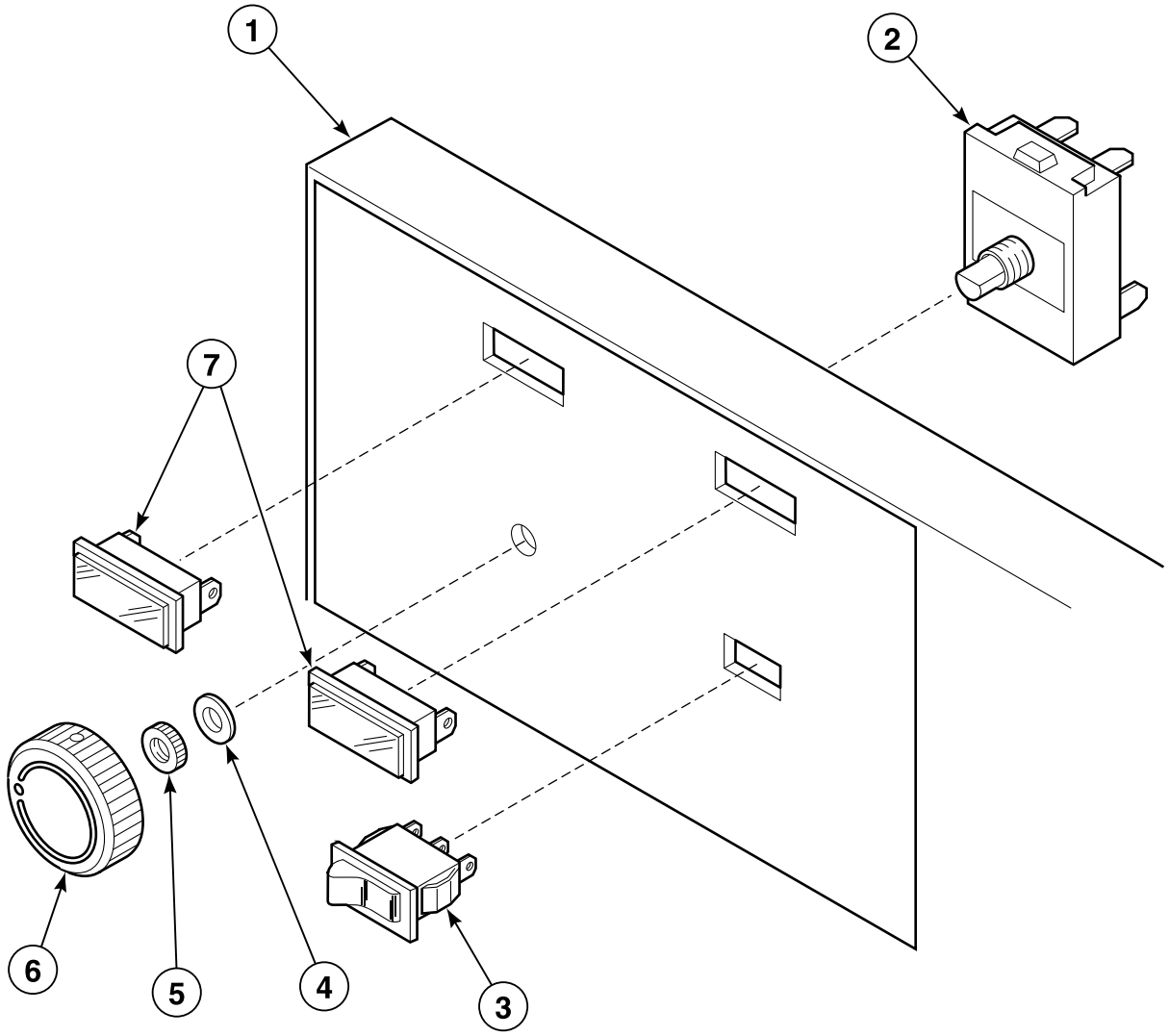

TMB1331P_M411449

© Copyright, Alliance Laundry Systems LLC – DO NOT COPY or TRANSMIT

Temperature Controls

REF	PART NO.	DESCRIPTION	COMMENTS
	H759P3	Control Replacement Kit	From Robert Shaw solid state control to 24 Volt electronic control
1	N/A	Graphic Panel	Black
2	27762	Switch	3 position
3	M413270	Rocker Switch	Reversing/nonreversing
4	91176	Washer	
5	24205	Nut	
6	M400777	Knob	
	N/A	Knob	Temperature; Models JTD150CG and JTD150CSH
7	M400704	Pilot Light	

N/A = Part no longer available

© Copyright, Alliance Laundry Systems LLC – DO NOT COPY or TRANSMIT

Access and Lint Panels

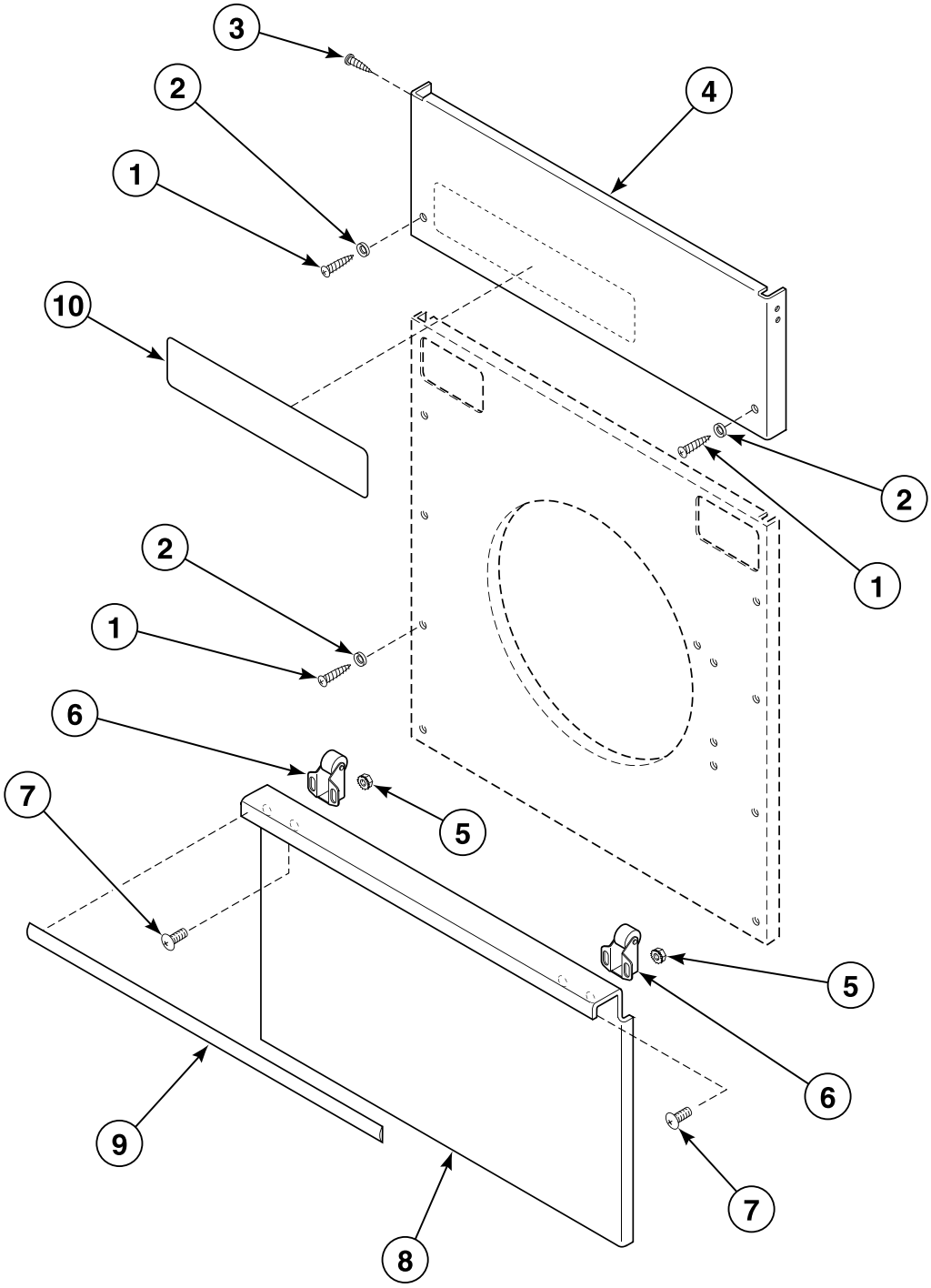

TMB2213P_M411449

© Copyright, Alliance Laundry Systems LLC – DO NOT COPY or TRANSMIT

Access and Lint Panels

REF	PART NO.	DESCRIPTION	COMMENTS
1	N/A	Screw	
2	H88569108	Washer	
3	N/A	Screw	
4	N/A	Front Panel	Upper
5	23951	Nut	
6	H87020202	Roller Catch	
7	M400044	Screw	
8	N/A	Lint Panel	
9	H81224511P	Trim	Rubber
10	N/A	Nameplate	Cocoa; Models JT150CG, JT150CSH, JTD150CG and JTD150CSH
	N/A	Nameplate	Silver; Models JT150CG, JT150CSH, JTD150CG and JTD150CSH
	M410355	Nameplate	Models ST150CG, ST150CSH, STD150CG and STD150CSH

N/A = Part no longer available

© Copyright, Alliance Laundry Systems LLC – DO NOT COPY or TRANSMIT

Front Panels

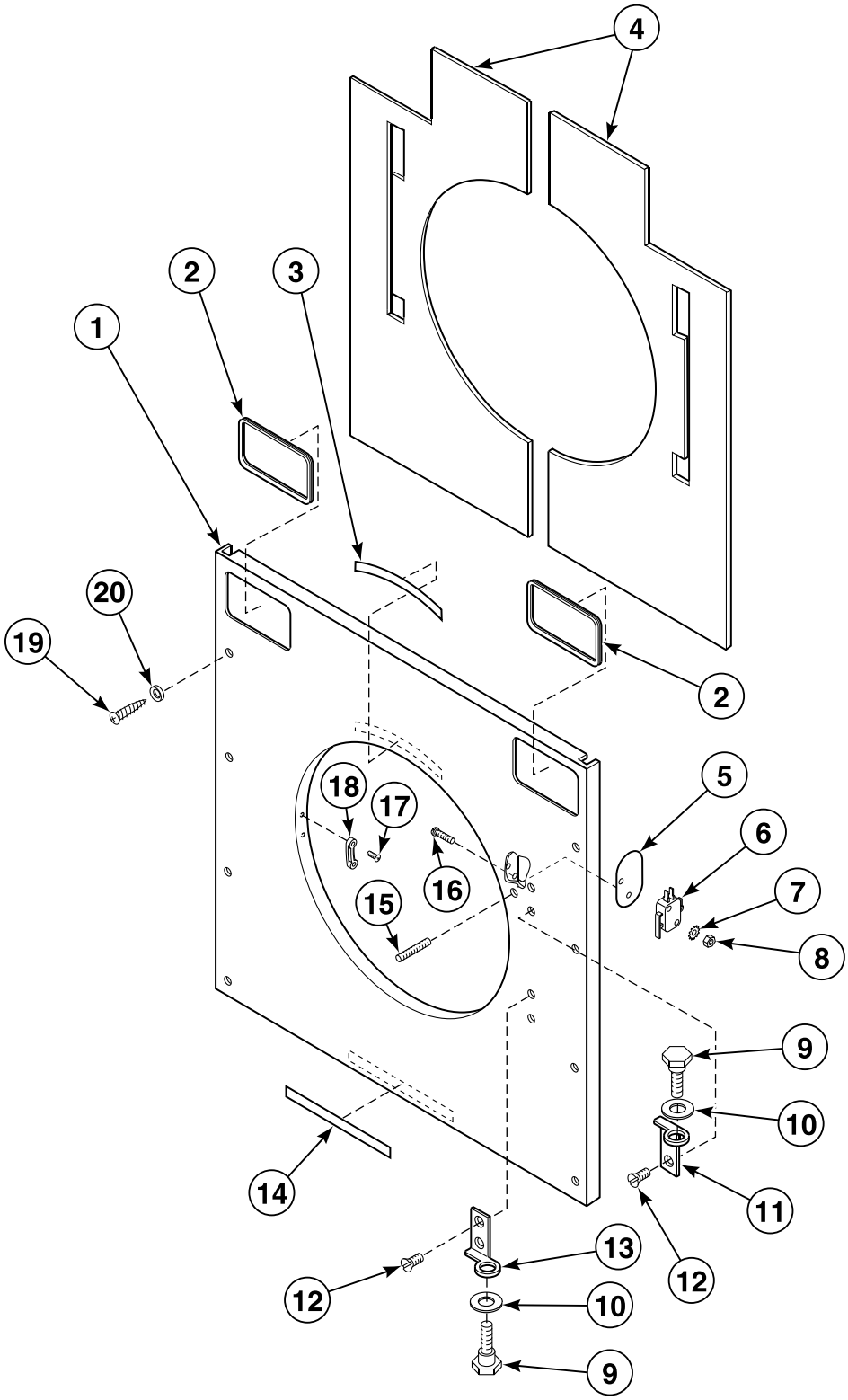

TMB2901P_M411449

© Copyright, Alliance Laundry Systems LLC – DO NOT COPY or TRANSMIT

Front Panels

REF	PART NO.	DESCRIPTION	COMMENTS
1	M410270WP	Front Panel	Center; Dual timer models
	N/A	Front Panel	Single timer models
	M410271	Front Panel	Center; Dual timer models; Stainless steel
2	N/A	Trim	Rubber
3	M410892	Warning Label	
4	N/A	Insulation	
5	H96418728	Mounting Insulation	
6	H96422241	Door Switch	
7	51345	Washer	
8	70072901	Nut	
9	M410029	Hinge Pin	
10	M400671	Washer	
11	M410041P	Panel Hinge Kit	Upper
12	H88129788	Screw	
13	M410042P	Panel Hinge Kit	Lower
14	N/A	Lint Compartment Sticker	
15	M409976	Screw	
16	M400072	Screw	
17	M401223	Door Latch	
18	H88110267	Screw	
19	N/A	Screw	
20	H88569108	Washer	

N/A = Part no longer available

© Copyright, Alliance Laundry Systems LLC – DO NOT COPY or TRANSMIT

Loading Door

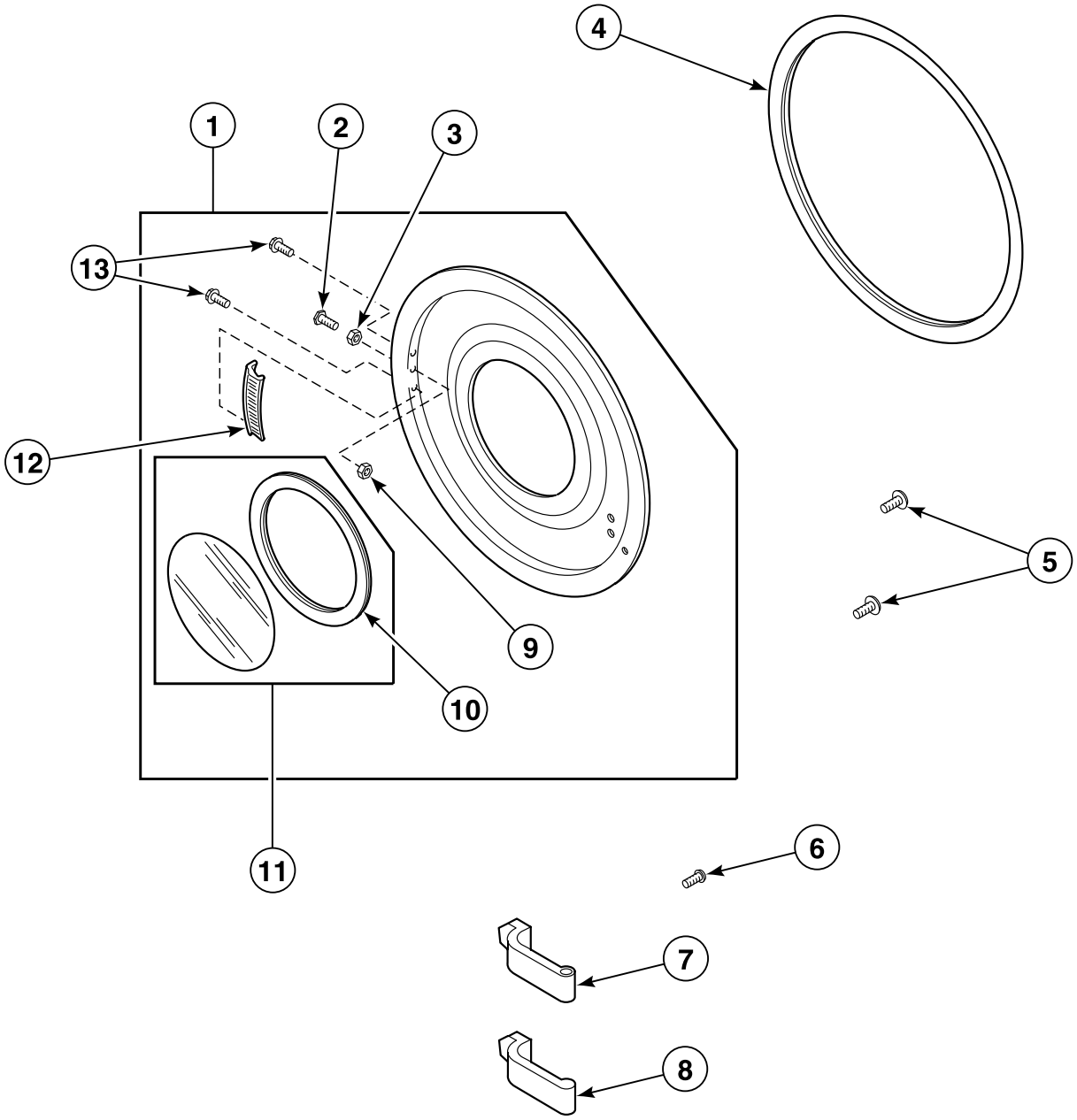

TMB2902P_M411449

© Copyright, Alliance Laundry Systems LLC – DO NOT COPY or TRANSMIT

Loading Door

REF	PART NO.	DESCRIPTION	COMMENTS
1	M410289*P	Loading Door Assembly	Includes items 2, 3 and 9-13
2	M400661	Screw	Door strike
3	Q6163	Nut	
4	H96409156P	Loading Door Gasket	
5	H88129648	Screw	
6	M400044	Screw	
7	M410030	Upper Door Hinge	Models JT150CG, JT150CSH, JTD150CG and JTD150CSH
	M410701P	Upper Door Hinge	Models ST150CG, ST150CSH, STD150CG and STD150CSH
8	M410031	Lower Door Hinge	Models JT150CG, JT150CSH, JTD150CG and JTD150CSH
	M410702P	Lower Door Hinge	Models ST150CG, ST150CSH, STD150CG and STD150CSH
9	70054	Nut	
10	70211904P	Door Seal Kit	
11	M409899P	Door Glass and Seal Kit	Includes item 10
12	M400133	Door Handle	
13	M409385	Screw	

*** Add Letter To Designate Color. B - Battina Green H - Harvest Gold K - Red L - Almond P - Turquoise V - Orange W - White X - Electric Blue**

© Copyright, Alliance Laundry Systems LLC – DO NOT COPY or TRANSMIT

Lint Screen and Frame

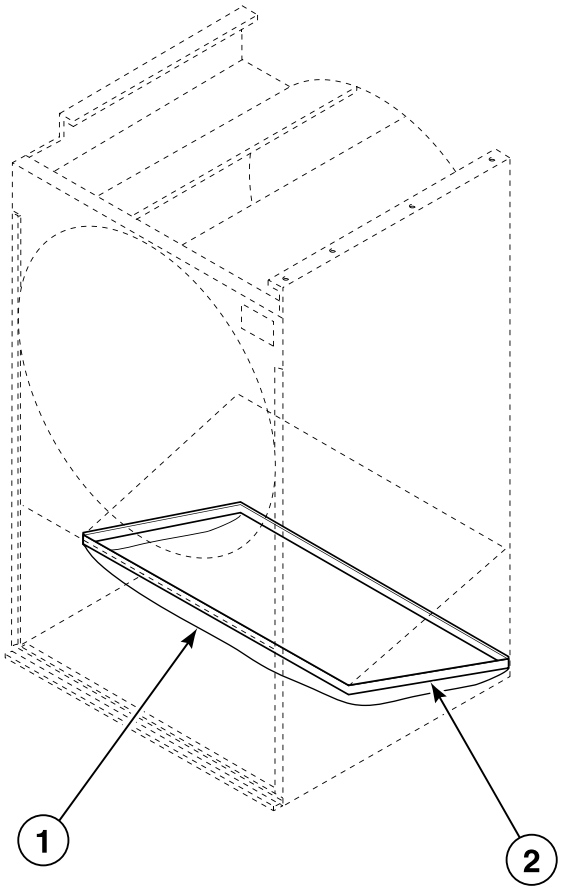

TMB1332P_M411449

© Copyright, Alliance Laundry Systems LLC – DO NOT COPY or TRANSMIT

Lint Screen and Frame

REF	PART NO.	DESCRIPTION	COMMENTS
1	44077703P	Lint Screen	With snaps
2	H96362025	Lint Screen Frame	

© Copyright, Alliance Laundry Systems LLC – DO NOT COPY or TRANSMIT

Drive Guard Components

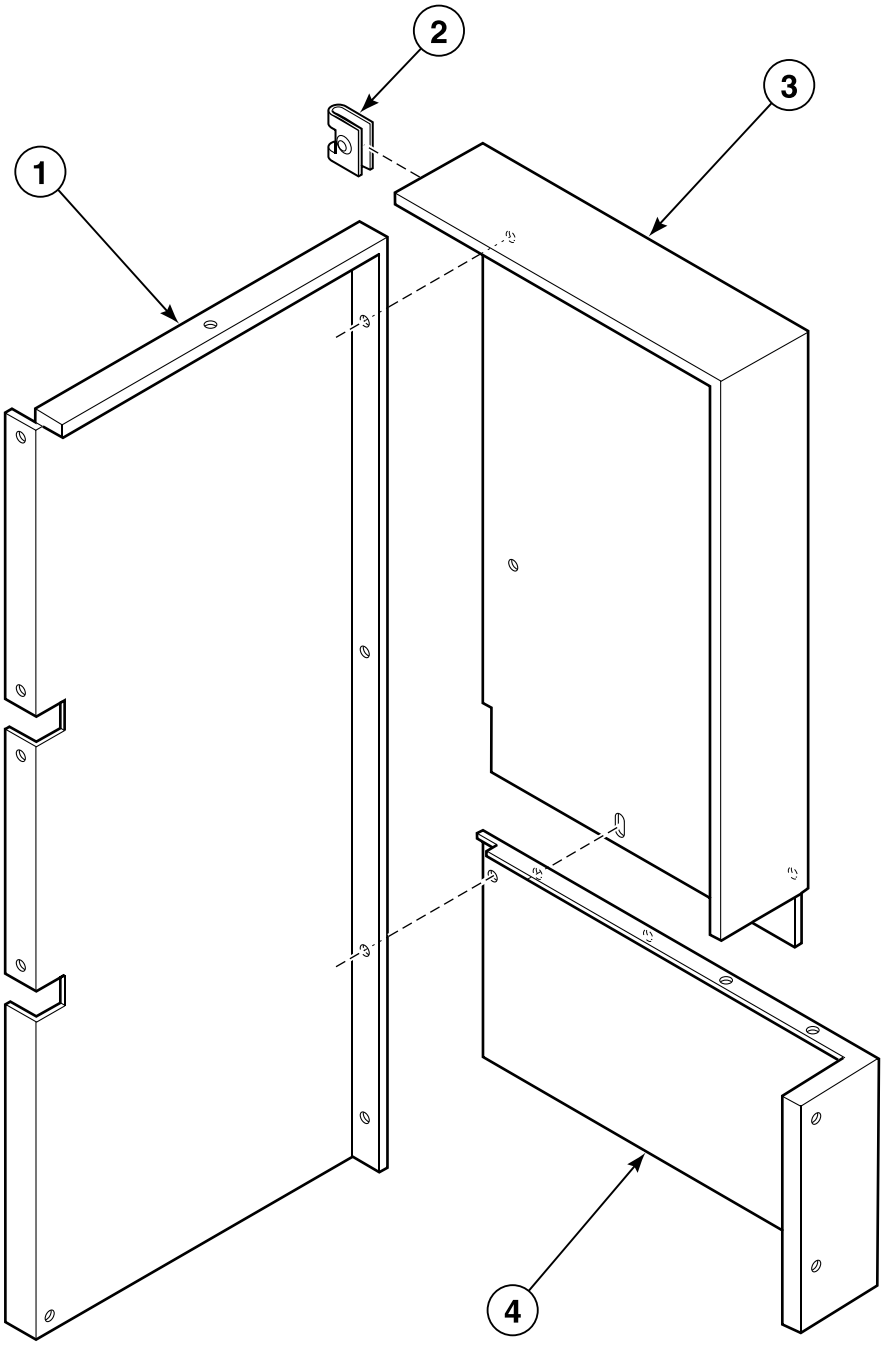

TMB2076P_M411449

© Copyright, Alliance Laundry Systems LLC – DO NOT COPY or TRANSMIT

Drive Guard Components

REF	PART NO.	DESCRIPTION	COMMENTS
1	H96368725	Belt Guard Side	
2	H8841927H	Nut	
3	H96367669	Belt Cover Assembly	Upper
4	H96368733	Bottom Belt Cover	

© Copyright, Alliance Laundry Systems LLC – DO NOT COPY or TRANSMIT

Drive Sheave, Step Pulley and Belts

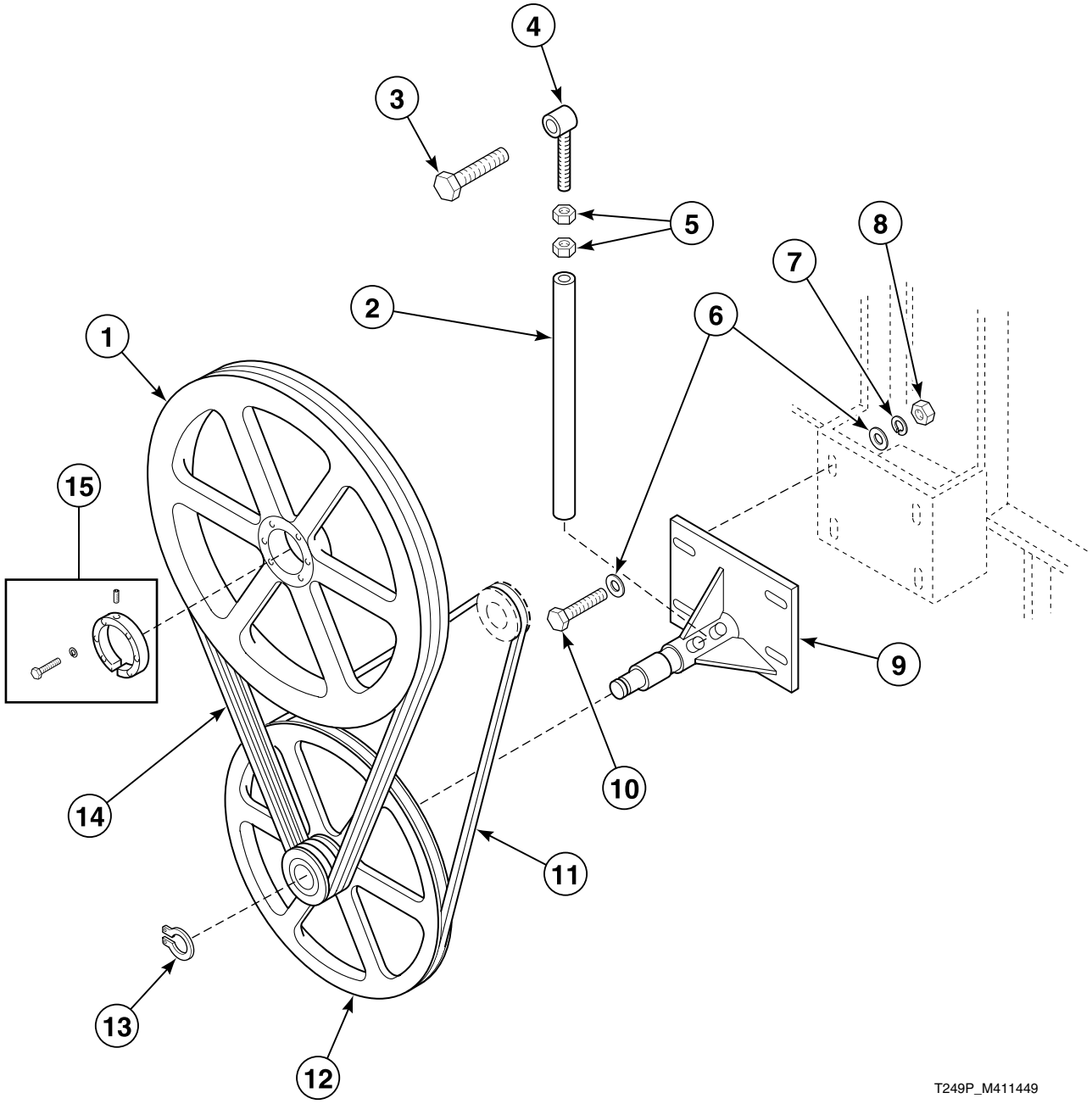

© Copyright, Alliance Laundry Systems LLC – DO NOT COPY or TRANSMIT

Drive Sheave, Step Pulley and Belts

REF	PART NO.	DESCRIPTION	COMMENTS
	H88603477	Retaining Ring	2 required
	M4718P3	Step Pulley Outer Bearing Kit	
	H87672374	Ball Bearing	Inner
1	H8752251H	Sheave	
2	H96428487	Belt Adjustment Tube	
3	H88001565	Screw	
4	44048501	Rod End	
5	M404993	Nut	
6	M400080	Washer	
7	M400014	Washer	
8	20274	Nut	
9	H96357751	Jackshaft Assembly	
10	M400043	Screw	
11	H87533014	Belt	
12	H96428024	Step Pulley	
13	H88602263	Retaining Ring	
14	H87533816P	Belt Set	Set of 3
15	H8752985HP	Bushing	

© Copyright, Alliance Laundry Systems LLC – DO NOT COPY or TRANSMIT

Trunnion Bearings

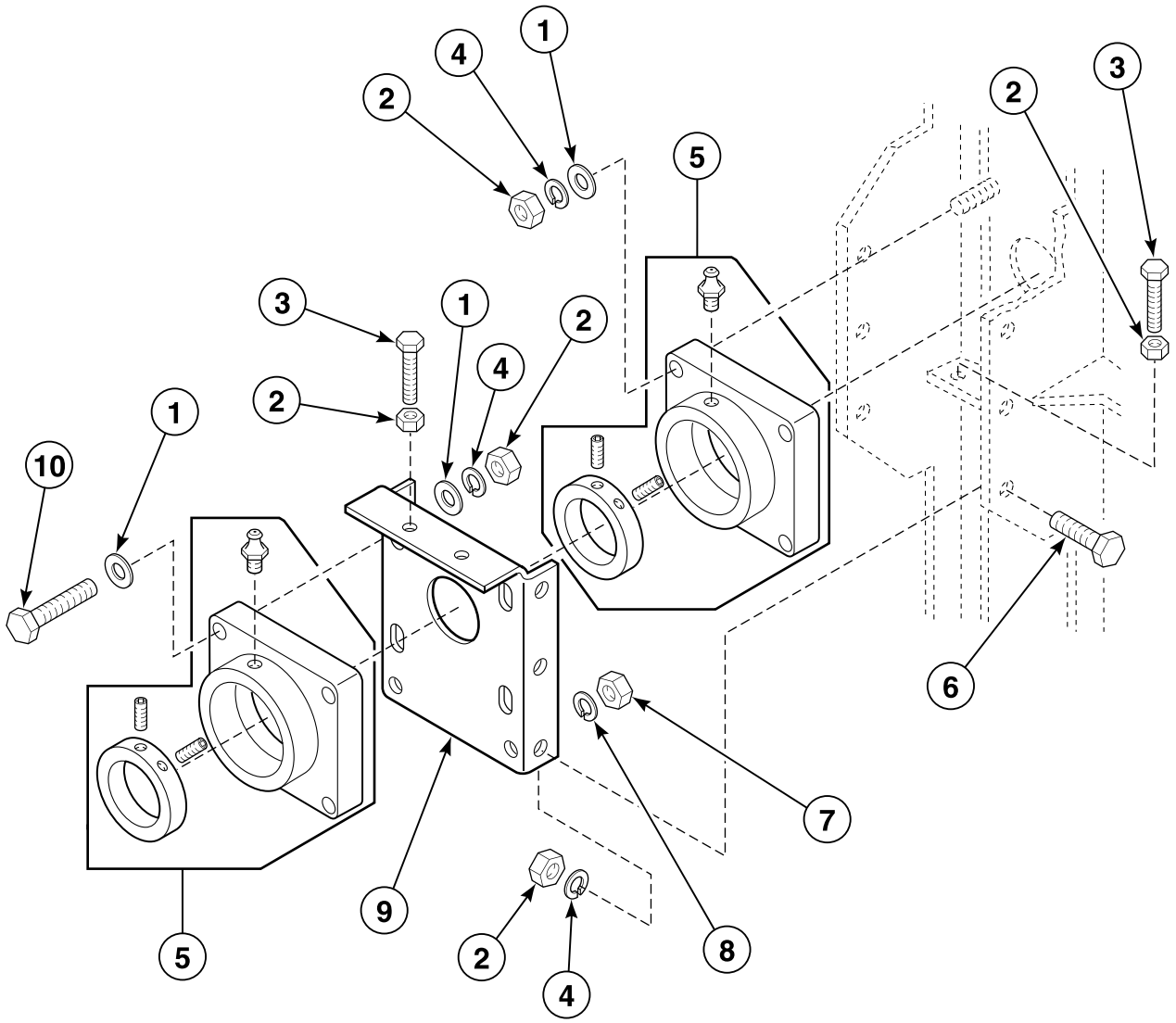

T240P_M411449

© Copyright, Alliance Laundry Systems LLC – DO NOT COPY or TRANSMIT

Trunnion Bearings

REF	PART NO.	DESCRIPTION	COMMENTS
1	M400081	Washer	
2	20274	Nut	
3	H88213996	Screw	
4	M400014	Washer	
5	44048301P	Flange Bearing	
6	H88111703	Screw	
7	H88412093	Nut	
8	N/A	Washer	
9	H96428008	Bearing Mounting	
10	22688	Screw	

N/A = Part no longer available

© Copyright, Alliance Laundry Systems LLC – DO NOT COPY or TRANSMIT

Cylinder and Trunnion Assembly

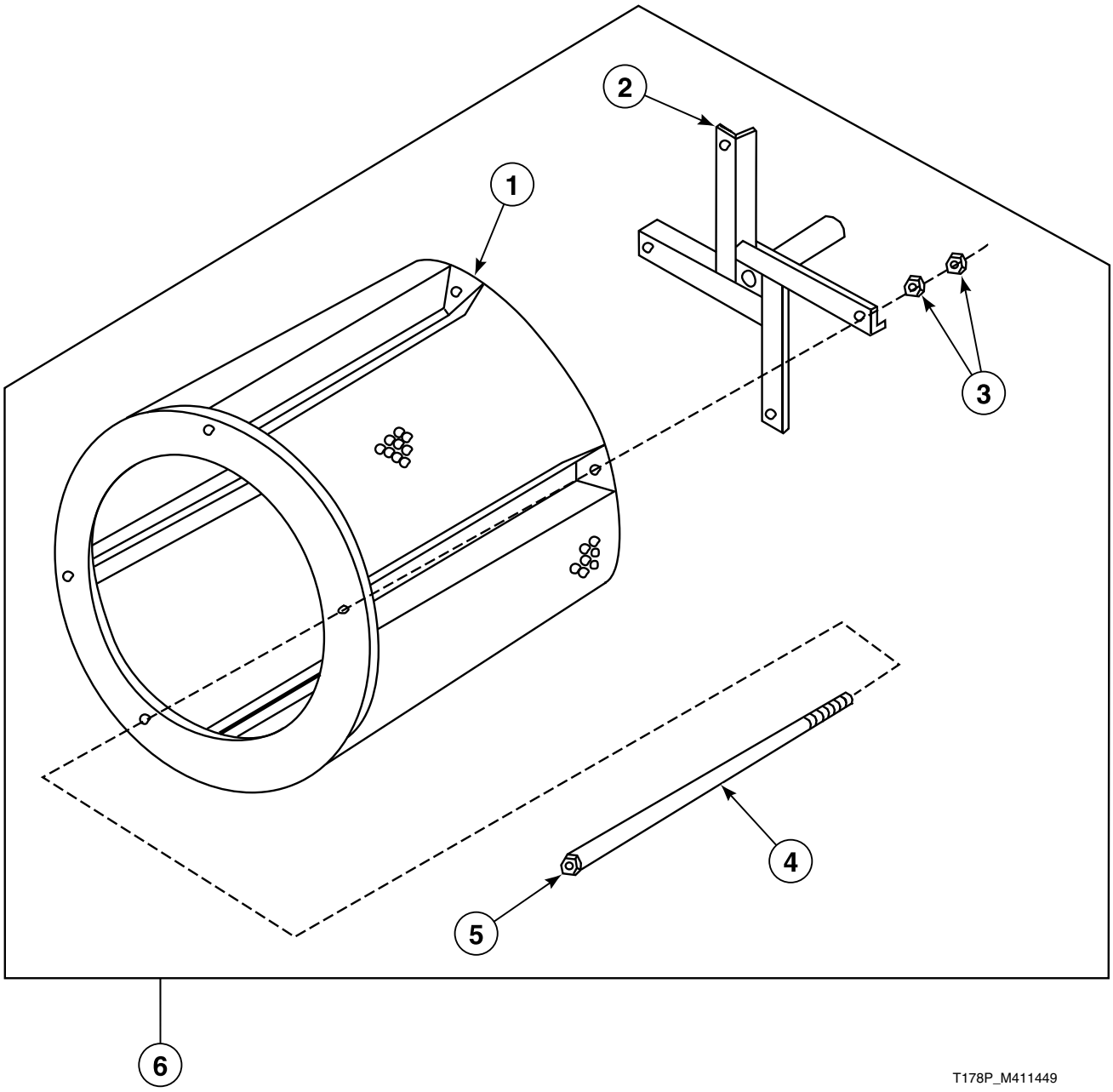

© Copyright, Alliance Laundry Systems LLC – DO NOT COPY or TRANSMIT

Cylinder and Trunnion Assembly

REF	PART NO.	DESCRIPTION	COMMENTS
1	H96367545	Cylinder Assembly	Galvanized
	M409826	Cylinder Assembly	Stainless steel
2	44054601	Trunnion Assembly	
3	M404993	Nut	
4	H8830143H	Bolt	
5	M412334	Nut	
6	44054701	Cylinder and Trunnion Assembly	Galvanized
	44054702	Cylinder and Trunnion Assembly	Stainless steel

© Copyright, Alliance Laundry Systems LLC – DO NOT COPY or TRANSMIT

Cylinder Drive Motor

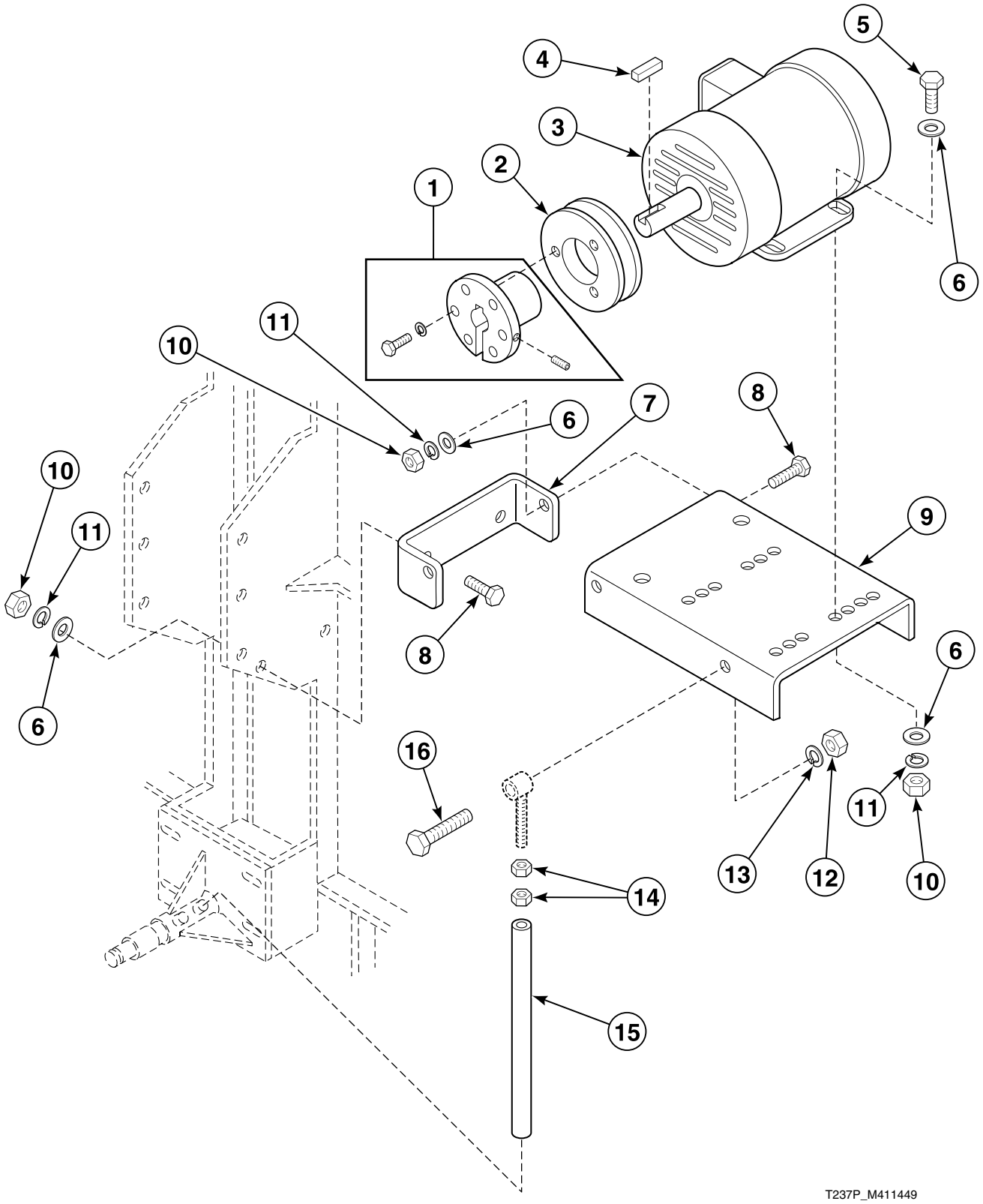

© Copyright, Alliance Laundry Systems LLC – DO NOT COPY or TRANSMIT

Cylinder Drive Motor

REF	PART NO.	DESCRIPTION	COMMENTS
1	H87529111P	Bushing	
2	H87520334	Sheave	60 Hertz
	H8752026H	Sheave	50 Hertz
3	H8371044H	Motor	208-240 or 480 Volt/60 Hertz/3 Phase
	H8371047HP	Motor	220, 380 or 415 Volt/50 Hertz/3 Phase
4	H8752006H	Key	
5	M400043	Screw	
6	M400080	Washer	
7	H96428693	Base Bracket	Motor
8	22688	Screw	
9	M413171	Motor Base	Reversing
10	20274	Nut	
11	M400014	Washer	
12	H88412093	Nut	
13	N/A	Washer	
14	M404993	Nut	
15	N/A	Belt Adjustment Tube	
16	H88001565	Screw	
17	44048501	Rod End	

N/A = Part no longer available

© Copyright, Alliance Laundry Systems LLC – DO NOT COPY or TRANSMIT

Fan and Motor

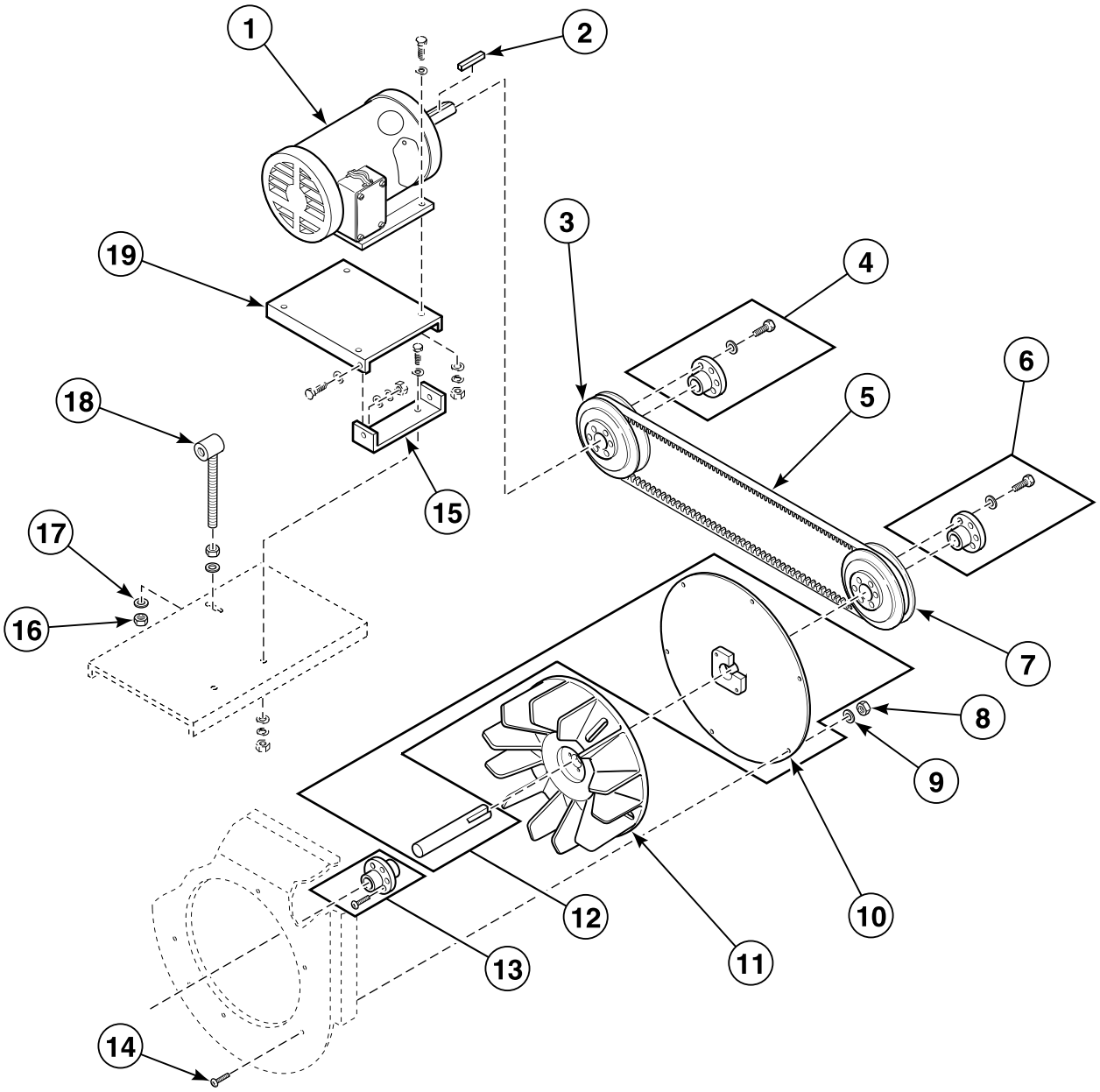

TMB2077P_M411449

© Copyright, Alliance Laundry Systems LLC – DO NOT COPY or TRANSMIT

Fan and Motor

REF	PART NO.	DESCRIPTION	COMMENTS
	22688	Screw	Motor and bracket mounting hardware; 10 required
	M400080	Washer	Motor and bracket mounting hardware; 20 required
	M400014	Washer	Motor and bracket mounting hardware; 10 required
	20274	Nut	Motor and bracket mounting hardware; 10 required
1	N/A	Motor	208, 230 or 460 Volt/60 Hertz/3 Phase
	N/A	Motor	220, 380 or 440 Volt/50 Hertz/3 Phase
2	H8752006H	Key	
3	H8752065H	Sheave	Motor; 50 Hertz
	H8752060H	Sheave	Motor; 60 Hertz
4	H8752931H	Bushing	
5	H87532685	Belt	
6	H8752922HP	Bushing	
7	H8752060H	Sheave	Blower; 50 Hertz
	H8752065H	Sheave	Blower; 60 Hertz
8	70142	Nut	8 required
9	M400013	Washer	8 required
10	N/A	Blower Cover	
11	H96368469	Fan	
12	M4680P3	Fan Bearing Conversion Kit	Includes item 10
13	M412917P	Bushing	
14	M400056	Screw	8 required
15	H96428693	Base Bracket	Motor
16	M404993	Nut	2 required
17	Q6712	Washer	2 required
18	44048501	Rod End	
19	M413171	Motor Base	Reversing

N/A = Part no longer available

© Copyright, Alliance Laundry Systems LLC – DO NOT COPY or TRANSMIT

Exhaust System Components

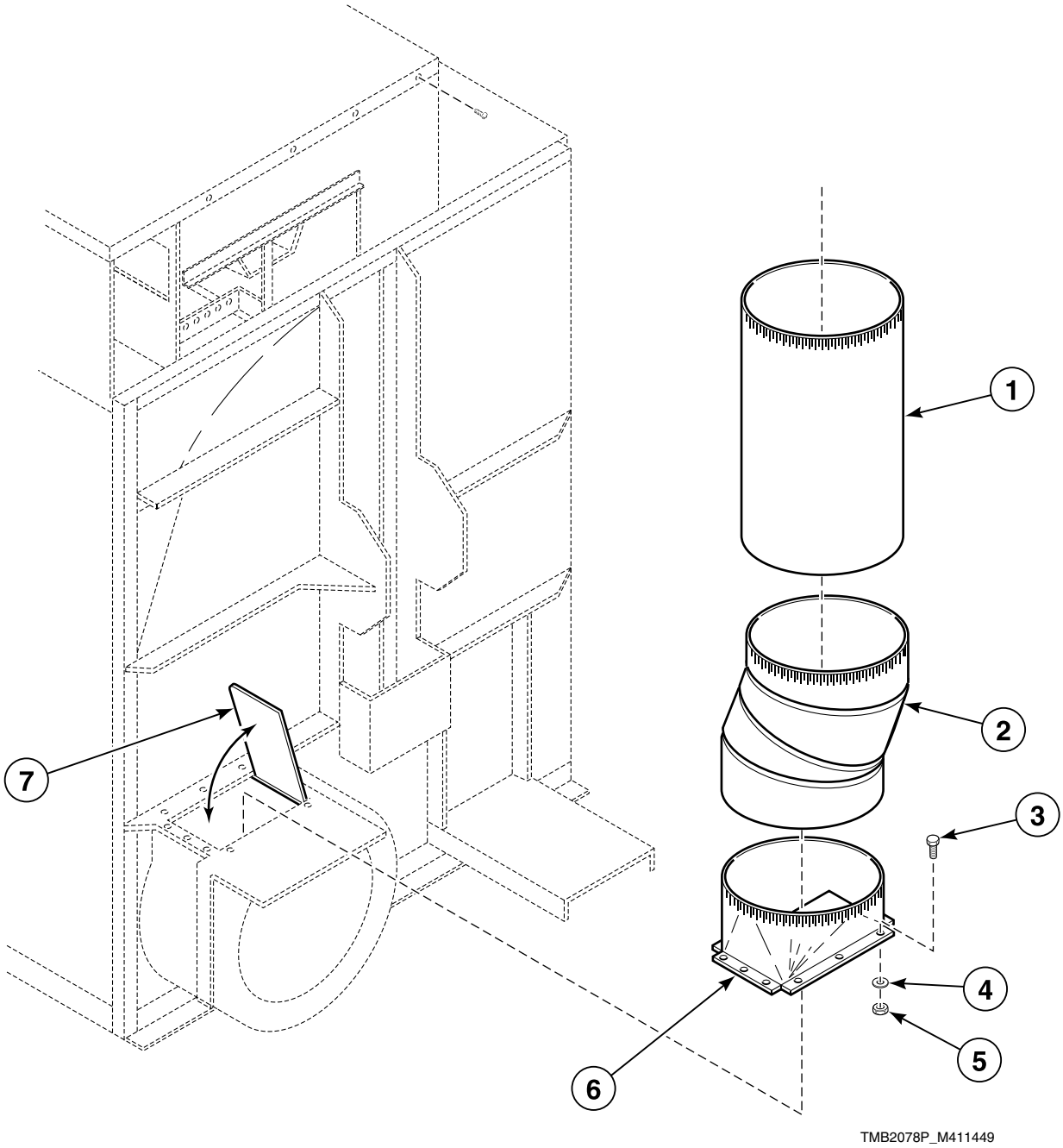

© Copyright, Alliance Laundry Systems LLC – DO NOT COPY or TRANSMIT

Exhaust System Components

REF	PART NO.	DESCRIPTION	COMMENTS
1	N/A	Vent Pipe	
2	N/A	Elbow	
3	H88010038	Screw	
4	20275	Nut	
5	03189	Washer	
6	N/A	Duct Transition	
7	N/A	Damper	

N/A = Part no longer available

© Copyright, Alliance Laundry Systems LLC – DO NOT COPY or TRANSMIT

Control Thermostats

Located in Blower Housing

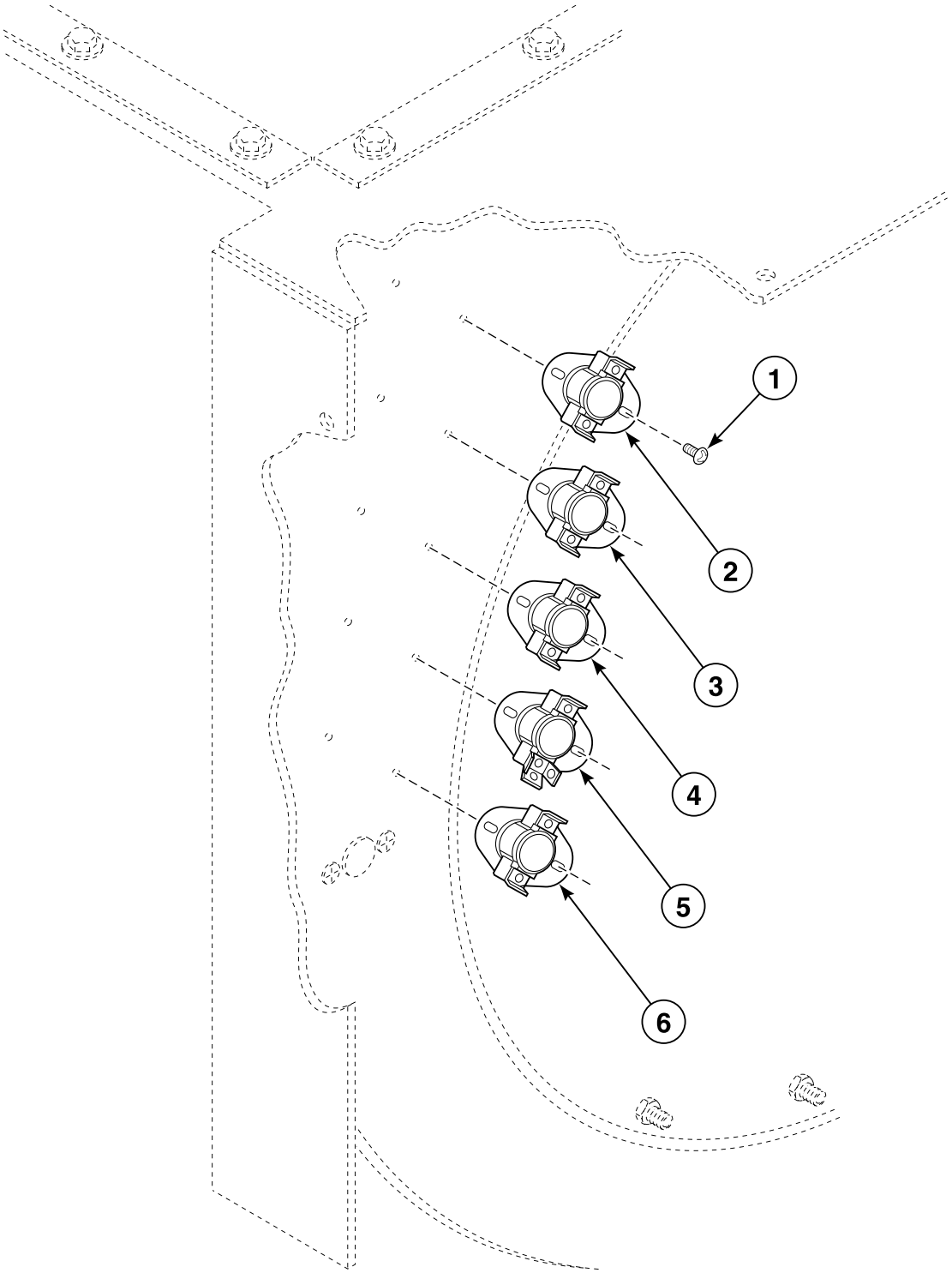

TMB2079P_M411449

© Copyright, Alliance Laundry Systems LLC – DO NOT COPY or TRANSMIT

Control Thermostats

REF	PART NO.	DESCRIPTION	COMMENTS
1	H88214515	Screw	
2	H8900531H	Thermostat	High
3	H89005227	Thermostat	Cabinet high limit; Auto reset; 60 Hertz
	N/A	Thermostat	Cabinet high limit; Manual reset; 50 Hertz
4	H89005235	Thermostat	Medium
5	H89005243	Thermostat	Low
6	H8900530H	Thermostat	Load ready

N/A = Part no longer available

© Copyright, Alliance Laundry Systems LLC – DO NOT COPY or TRANSMIT

Gas Burner and Controls

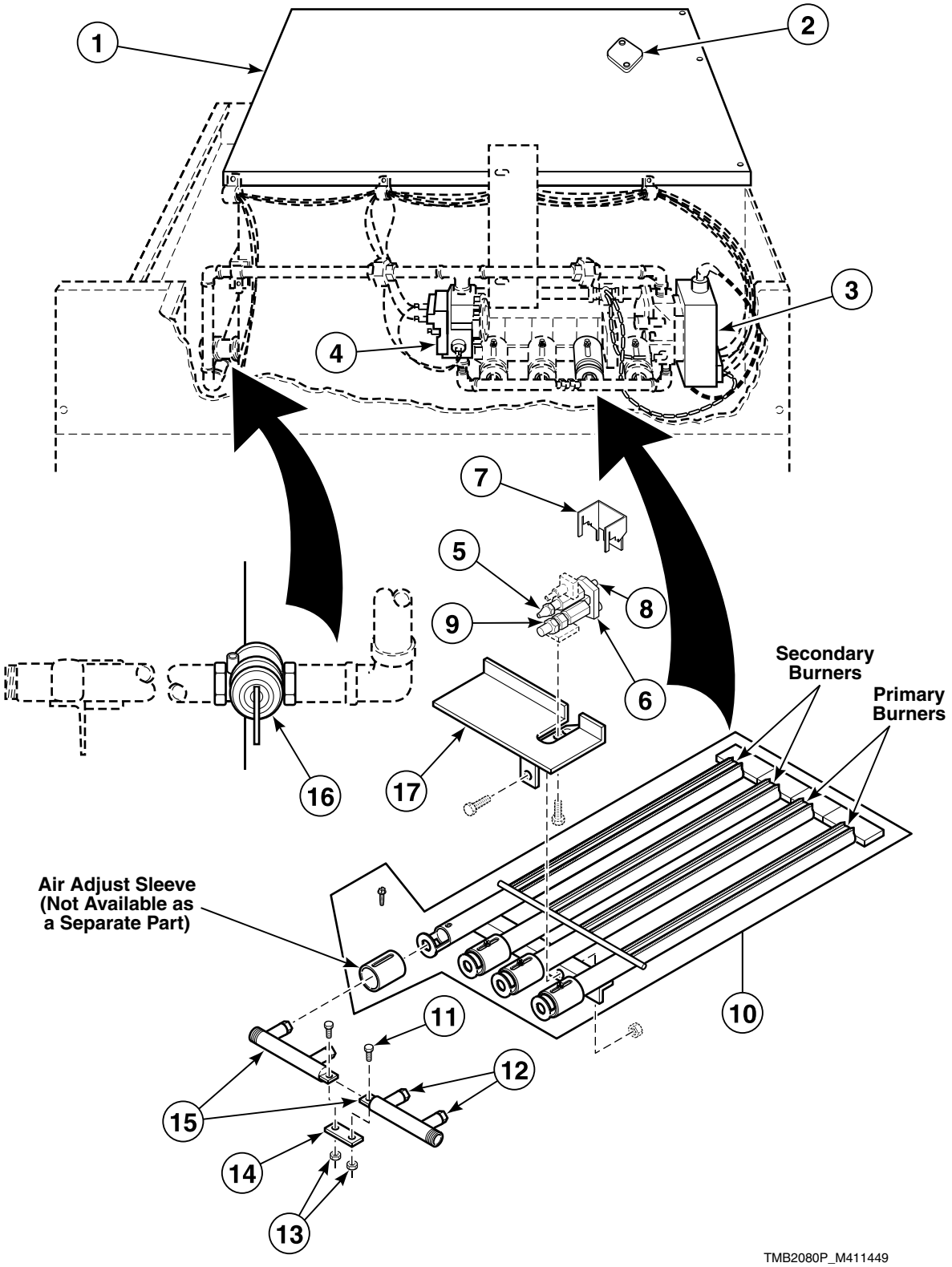

© Copyright, Alliance Laundry Systems LLC – DO NOT COPY or TRANSMIT

Gas Burner and Controls

REF	PART NO.	DESCRIPTION	COMMENTS
	M400763	Plate Kit	Used to convert M411413 Valve and Control Assembly for use with Liquid Petroleum Gas (L.P.)
1	N/A	Flash Shield	Shown rotated 90 degrees
2	N/A	Thermostat	High limit; 50 Hertz
	H89005169P	High Limit Thermostat	60 Hertz
3	M411413P	Valve and Control Assembly	Natural Gas (N.G.); Use M400763 Plate Kit to convert this valve for use with L.P.
	M411414	Valve and Control Assembly	L.P.
4	H8526918HP	Gas Valve	N.G.
5	H85289114	Probe Lead	
6	H89000921P	Pilot Burner Assembly	
7	N/A	Pilot Shield	
8	M401209P	Sensor Probe	
9	H8900079H	Pilot Orifice	N.G.
	Q8152	Burner Orifice	L.P.
10	M410405R	N.G. Burner	
	M410405	L.P. Burner	
11	02422	Screw	2 required
12	N/A	Burner Orifice	N.G.; Primary burner; 2,001-4,000 feet
	N/A	Burner Orifice	N.G.; Primary burner; 4,001-6,000 feet
	M409755	Burner Orifice	N.G.; Secondary burner; 0-2,000 feet; Drill no. 6 (5.2 mm)
	M411423	Burner Orifice	N.G.; Secondary burner; 2,001-4,000 feet; Drill no. 9 (5.0 mm)
	N/A	Burner Orifice	N.G.; Secondary burner; 4,001-6,000 feet
	N/A	Burner Orifice	L.P.; Primary burner; 4,001-6,000 feet
	N/A	Burner Orifice	Main burner; L.P.; Secondary burner; 0-2,000 feet
13	20275	Nut	2 required
14	N/A	Manifold Bracket	
15	N/A	Manifold Assembly	
16	M413016	Ball Valve	Manual; Shown closed
17	N/A	Pilot Mounting Bracket	

N/A = Part no longer available

© Copyright, Alliance Laundry Systems LLC – DO NOT COPY or TRANSMIT

Steam Heating Unit

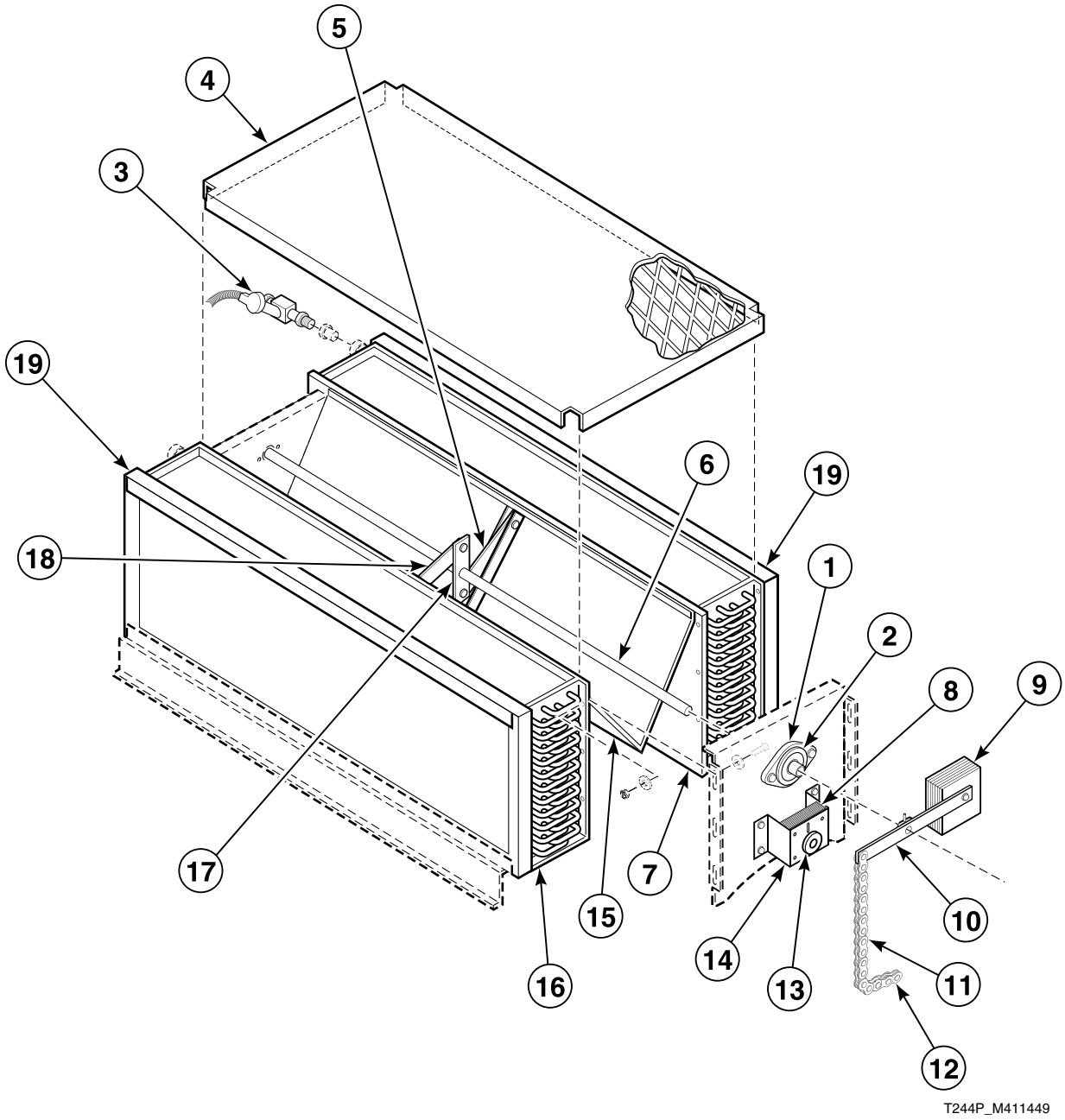

© Copyright, Alliance Laundry Systems LLC – DO NOT COPY or TRANSMIT

Steam Heating Unit

REF	PART NO.	DESCRIPTION	COMMENTS
1	H96382080	Bearing Flangette	Sold per pair
2	H96382098	Bearing Insert	
3	M413298P	Steam Valve	Solenoid; 2 required; 50 Hertz
	M413297P	Steam Valve	Solenoid; 2 required; 60 Hertz
4	44018501	Steam Coil Housing Cover	
5	N/A	Damper Link	
6	N/A	Damper Shaft	
7	M409834P	Steam Coil	Right
8	G159756P	Drain Valve Motor	
9	M413331	Damper Counterweight	7 required
10	H96387501	Actuator Arm Assembly	
11	H96388186	Drive Chain	
12	H96382072	Master Link	
13	H96388178	Drive Wheel	
14	H96388145	Motor Bracket	Motor damper
15	M409967	Damper Assembly	2 required
16	M409833P	Steam Coil	Left
17	N/A	Actuator	
18	N/A	Damper Link	
19	H96362264	Coil Filter	2 required

N/A = Part no longer available

© Copyright, Alliance Laundry Systems LLC – DO NOT COPY or TRANSMIT

Airflow Switch

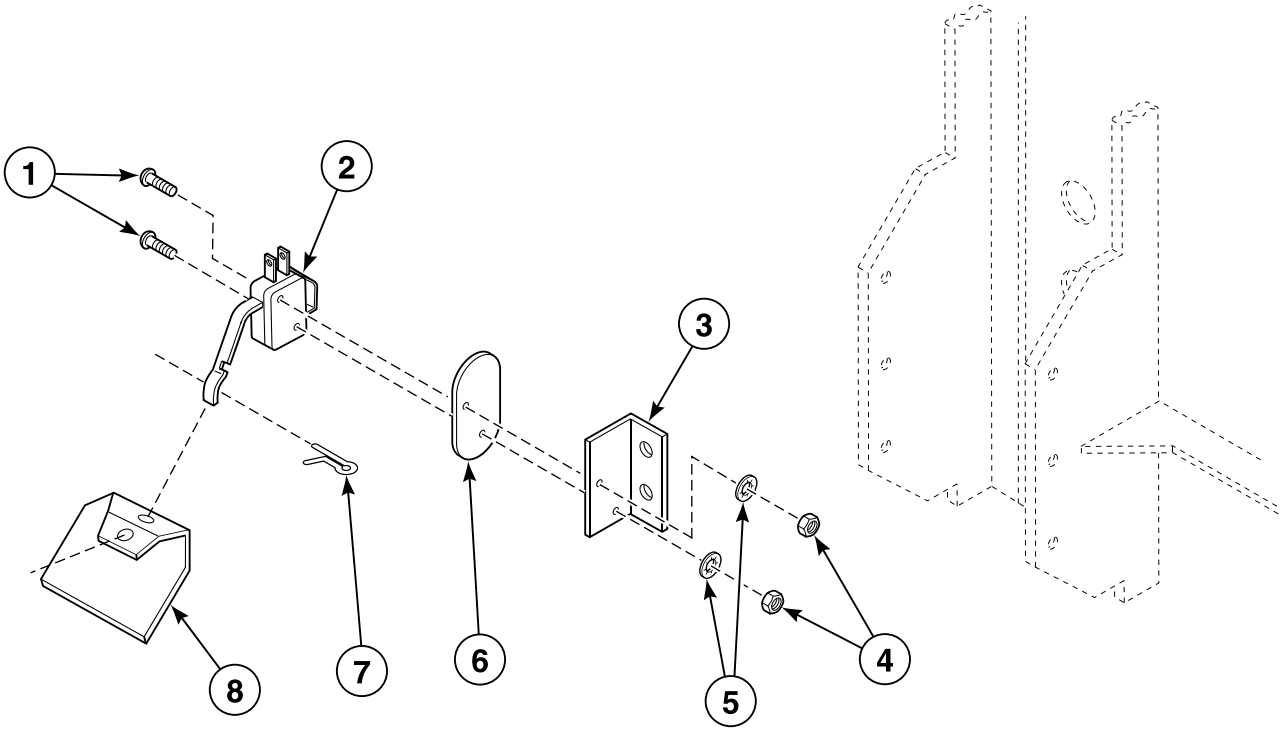

TMB2081P_M411449

© Copyright, Alliance Laundry Systems LLC – DO NOT COPY or TRANSMIT

Airflow Switch

REF	PART NO.	DESCRIPTION	COMMENTS
	430372P	Airflow Switch Bracket and Vane Kit	
1	M401938	Screw	
2	44021701	Lever Arm Switch	
3	430370	Airflow Switch Bracket	
4	70072901	Nut	
5	51345	Washer	
6	H96418728	Mounting Insulation	
7	02470	Cotter Pin	
8	430372	Airflow Switch Vane	

© Copyright, Alliance Laundry Systems LLC – DO NOT COPY or TRANSMIT

Reversing Controls

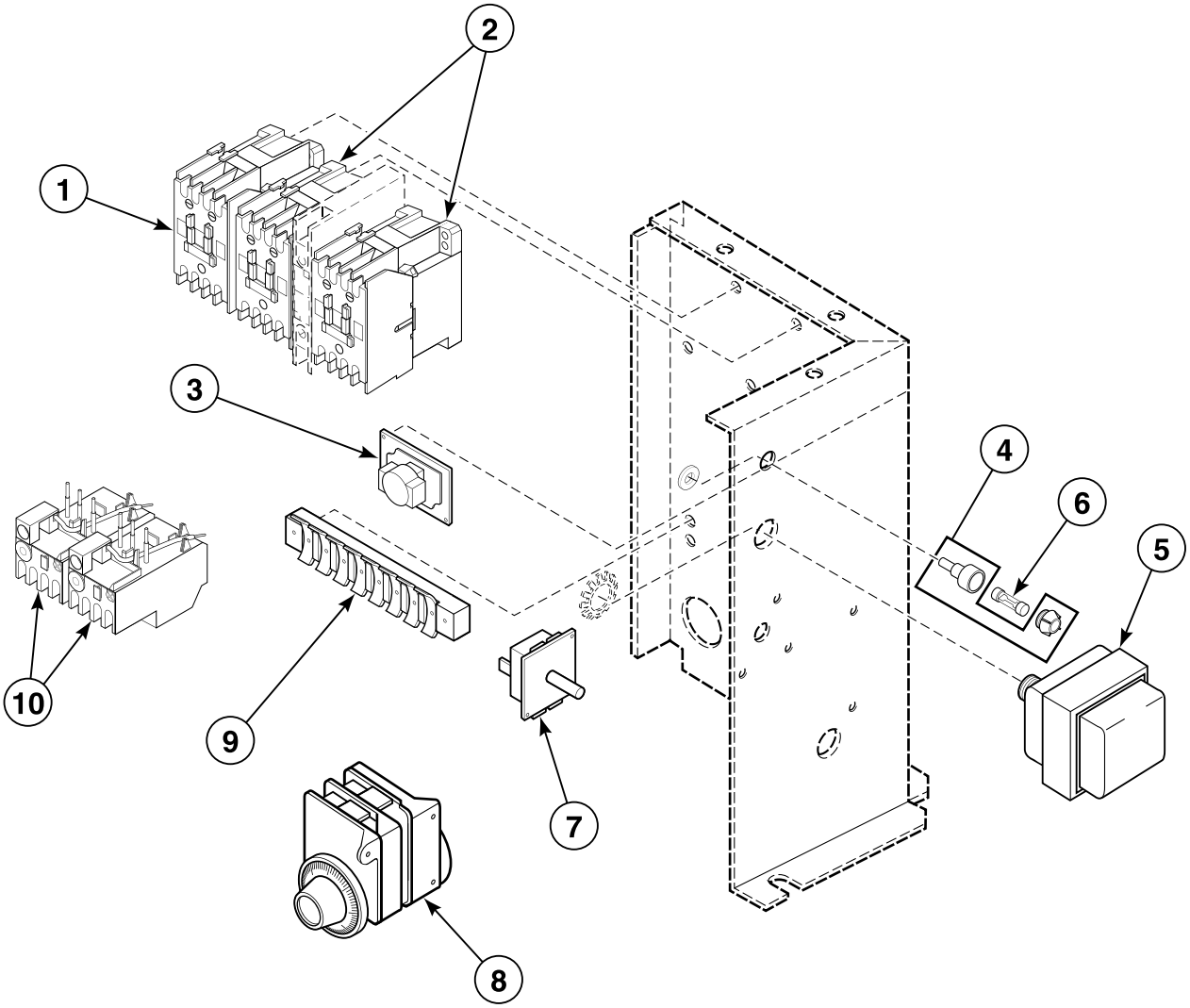

TMB1296P_M411449

© Copyright, Alliance Laundry Systems LLC – DO NOT COPY or TRANSMIT

Reversing Controls

REF	PART NO.	DESCRIPTION	COMMENTS
1	N/A	Fan Contactor	
2	H8300831HP	Contactor	Reversing
3	N/A	Time Delay Relay	
4	H83900050	Fuse Holder	
5	H83904664P	Transformer	Ignition
6	G137653	Fuse	1 Amp; 250 VAC
7	N/A	Buzzer	
8	H96422399P	Reversing Timer	
9	N/A	Terminal Strip	
10	H8300105HP	Overload Relay	Drive motor; 208-240 Volt
	N/A	Overload Relay	Drive motor; 380, 415 or 460 Volt
	N/A	Overload Relay	Blower motor; 208-240 Volt
	N/A	Overload Relay	Blower motor; 380, 415 or 460 Volt

N/A = Part no longer available

© Copyright, Alliance Laundry Systems LLC – DO NOT COPY or TRANSMIT

Notes

© Copyright, Alliance Laundry Systems LLC – DO NOT COPY or TRANSMIT

Parts Index

A

Actuator Arm Assembly
H96387501 37
Airflow Switch Bracket
430370 39
Airflow Switch Bracket and Vane Kit
430372P 39
Airflow Switch Vane
430372 39

B

Ball Bearing
H87672374 21
Ball Valve
M413016 35
Base Bracket
H96428693 ..... 27, 29
Bearing Flangette
H96382080 37
Bearing Insert
H96382098 37
Bearing Mounting
H96428008 23
Belt
H87532685 29
H87533014 21
Belt Adjustment Tube
H96428487 21
Belt Cover Assembly
H96367669 19
Belt Guard Side
H96368725 19
Belt Set
H87533816P 21
Bolt
H8830143H 25
Bottom Belt Cover
H96368733 19
Burner Orifice
M409755 35
M411423 35
Q8152 35
Bushing
H87529111P 27
H8752922HP 29
H8752931H 29
H8752985HP 21
M412917P 29

C

Coil Filter
H96362264 37
Contactor
H8300831HP 41
Control Knob
H83901157 5
Control Replacement Kit
H759P3 9
Cotter Pin
02470 39
Cylinder and Trunnion Assembly
44054701 25
44054702 25
Cylinder Assembly
H96367545 25
M409826 25

D

Damper Assembly
M409967 37
Damper Counterweight
M413331 37
Door Glass and Seal Kit
M409899P 15
Door Handle
M400133 15
Door Latch
M401223 13
Door Seal Kit
70211904P 15
Door Switch
H96422241 13
Drain Valve Motor
G159756P 37
Drive Chain
H96388186 37
Drive Wheel
H96388178 37

F

Fan
H96368469 29
Fan Bearing Conversion Kit
M4680P3 29
Flange Bearing
44048301P 23
Front Panel
M410270WP 13
M410271 13
Fuse
G137653 41
Fuse Holder
H83900050 41

G

Gas Valve
H8526918HP 35

N/A items do not appear in index.

© Copyright, Alliance Laundry Systems LLC – DO NOT COPY or TRANSMIT

Graphic Panel
M410869 7

H

High Limit Thermostat
H89005169P 35

Hinge Pin
M410029 13

J

Jackshaft Assembly
H96357751 21

K

Key
H8752006H 27, 29

Knob
M400773 7
M400777 9
M410927 7

L

Lever Arm Switch
44021701 39

Lint Screen
44077703P 17

Lint Screen Frame
H96362025 17

Loading Door Assembly
M410289*P 15

Loading Door Gasket
H96409156P 15

Lower Door Hinge
M410031 15
M410702P 15

L.P. Burner
M410405 35

M

Master Link
H96382072 37

Motor
H8371044H 27
H8371047HP 27

Motor Base
M413171 ..... 27, 29

Motor Bracket
H96388145 37

Mounting Insulation
H96418728 ..... 13, 39

N

Nameplate
M410355 11

Nut
H88412093 ..... 23, 27
H8841927H 19
M404993 ..... 21, 25, 27, 29
M412334 25
Q6163 15
20274 ..... 21, 23, 27, 29
20275 ..... 31, 35
23951 11
24205 9
70054 15
70072901 ..... 13, 39
70142 29

N.G. Burner
M410405R 35

O

Overload Relay
H8300105HP 41

P

Panel Hinge Kit
M410041P 13
M410042P 13

Pilot Burner Assembly
H89000921P 35

Pilot Light
M400704 ..... 7, 9

Pilot Orifice
H8900079H 35

Plate Kit
M400763 35

Probe Lead
H85289114 35

Push-to-Start Switch Kit
44106901P 7

R

Relay
M400911P 7

Resistor Assembly
M410992 7

Retaining Ring
H88602263 21
H88603477 21

Reversing Timer
H96422399P 41

Rocker Switch
M413270 ..... 5, 9

Rod End
44048501 ..... 21, 27, 29

Roller Catch
H87020202 11

N/A items do not appear in index.

© Copyright, Alliance Laundry Systems LLC – DO NOT COPY or TRANSMIT

S

Screw
- H88001565 ..... 21, 27
- H88010038 31
- H88110267 13
- H88111703 23
- H88129648 15
- H88129788 13
- H88213996 23
- H88214515 33
- M400043 ..... 21, 27
- M400044 ..... 11, 15
- M400056 29
- M400071 7
- M400072 ..... 7, 13
- M400661 15
- M400664 7
- M401938 39
- M409385 15
- M409976 13
- M411052 7
- 02422 35
- 22688 ..... 23, 27, 29
- 51780 7

Sensor Probe
- M401209P 35

Sheave
- H8752026H 27
- H87520334 27
- H8752060H 29
- H8752065H 29
- H8752251H 21

Steam Coil
- M409833P 37
- M409834P 37

Steam Coil Housing Cover
- 44018501 37

Steam Valve
- M413297P 37
- M413298P 37

Step Pulley
- H96428024 21

Step Pulley Outer Bearing Kit
- M4718P3 21

Switch
- 27762 9

T

Thermostat
- H89005227 33
- H89005235 33
- H89005243 33
- H8900530H 33
- H8900531H 33

Timer Kit
- M410900P 7
- M410901P 7
- M410902P 7
- M410903P 7

Toggle Switch
- M400945 5

Transformer
- H83904664P 41

Trim
- H81224511P 11

Trunnion Assembly
- 44054601 25

U

Upper Door Hinge
- M410030 15
- M410701P 15

V

Valve and Control Assembly
- M411413P 35
- M411414 35

W

Warning Label
- M410892 13

Washer
- H88569108 ..... 11, 13
- M400013 29
- M400014 ..... 21, 23, 27, 29
- M400080 ..... 21, 27, 29
- M400081 23
- M400671 13
- Q6712 29
- 03189 31
- 51345 ..... 13, 39
- 91176 9

N/A items do not appear in index.

© Copyright, Alliance Laundry Systems LLC – DO NOT COPY or TRANSMIT

Notes

© Copyright, Alliance Laundry Systems LLC – DO NOT COPY or TRANSMIT